IOTAFLOW
SYSTEMS PVT. LTD

GasPro RPD Gas Meter Installation User Manual

" If You Want To Manage It, Measure It "

www.iotaflow.com

Rotary Gas Meter

medium: **Natural gas (CH4) - gas family: Group 1**
operating conditions: **p = 0 - 30 bar / t = -25 - 70 °C**
mechanical class: **M2** - electromagnetic class: **E1**
Meter can be installed in open air: **NO**
Avoid direct sunshine on the meter.
IP-classification of index: IP67

PRECAUTIONS:

Never use the meter as a spool piece during welding.
The meter must be depressurised before filling or adding oil.
Before removing the meter, the oil should be drained.
The meter should be transported and stored with the rotor axis horizontal.
Use only devices with electrical characteristics as recommended (see connection diagram)
The maximum tightening torque on the Pressure and Temperature tapping connections is: **18 Nm**.
To tighten the swivel nuts; use 2 wrenches to avoid over tighten and damage the meter body.
Avoid mechanical shock during handling and transportation of the meter.
Avoid strong magnet fields close to the meter (particular the index), since they can affect the metrological performance and/or interrupt the pulse generators.
Seal all plugs and sight glasses to overcome fraud and/or theft of gas.

INSTALLATION INSTRUCTIONS:

1 Check the meter for damage due to transportation and handling. Insure the impellers turn freely and no objects or contaminations are in the measuring chamber.

2 The piping on the inlet side of the meter must be clean (free of dirt, welding beads and pipe scale). It is recommended to install a 100 micron filter upstream of the meter. For new installations it is recommended to install a mesh wire screen (250 micron) for the first weeks of operation.

3 Connect the meter inlet to the gas supply side of the line, insuring the gas flow will be in the same direction as the arrow on the meter body type plate. For P and T positions see figures below. The pressure reference connection (Pm) is always located on the INLET of the meter.

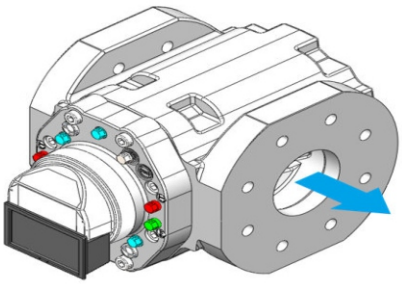

Left to Right

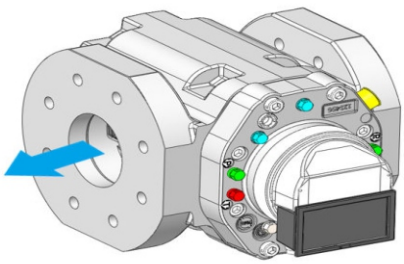

Right to Left

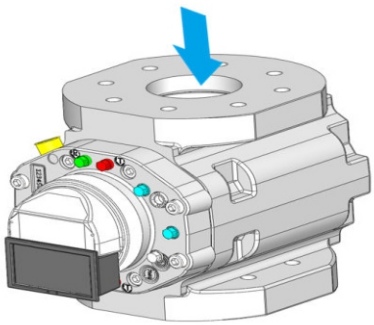

Top to Bottom

Pressure tapping

Temperature tapping

High frequency pulser

Lubrication Point

Install the meter without piping strain to prevent a binding of the impellers. Level the meter to within 5mm/m side-to-side and front-to-back.

5 Tighten flange bolts evenly in a crosswise pattern with a

nominal torque of :	___
maximal torque of :	___
thread size (T) :	___
thread length (L) :	**24 - 28 mm**

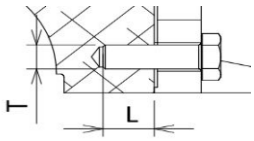

The specified tightening moments must be observed as much as possible. The values ??may be exceeded by a maximum of 20%. These values ??are determined by means of leakage investigations with gaskets and guarantee the proper functioning of the gas meter. In determining the values, the construction of the gas meter and safe use have been taken into account. Incorrect bolt/stud sizes and/or lengths can damage the meter body and lead to lock ups!

6 The meter is shipped without oil in the reservoir. To fill the meter remove the filling plug and slowly add oil to the reservoir until it reaches the centre of the oil gauge (sight glass).

Oil sight Glass

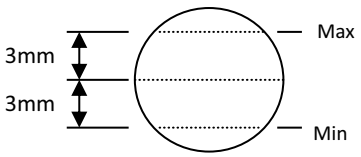

Indicative Oil volume	
horizontal flow direction:	**37cc**
vertical flow direction:	**99cc**

When lubricating the meter make sure the following type of oil is used:

Shell Morlina S2 BL10

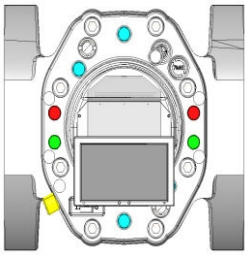

7 Requirements Index Connector:

If the meter is installed in a zone classified as hazardous area, ensure all connections are connected to intrinsically safe interfaces according to IEC 60947-5-6 (NAMUR)! Please observe the max. admissible electrical ratings for the applicable temperature classes.

connections connector 1

sensor	output	pin
3711	LF1	1 / 4
3711	LF2	2 / 5
3711	Tamper	3 / 6

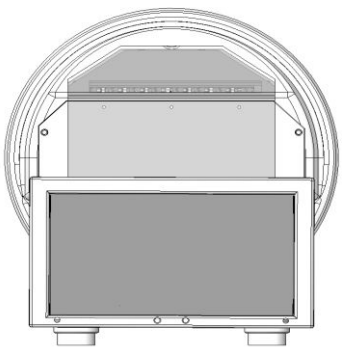

connector view

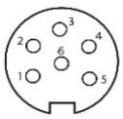

female

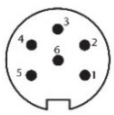

male

connector 1

Intrinsically safe input parameters					
Sensor(s): Type 3711 MSR					
EC type examination certificate:		BASEEFA 17ATEX0036X - Issue 0			
Temp. Class	**Ui (V)**	**Ii (mA)**	**Pi (mW)**	**Ci (nF)**	**Li (uH)**
T4	51	35	700	0	0
T5	51	35	400	0	0
T6	51	35	80	0	0

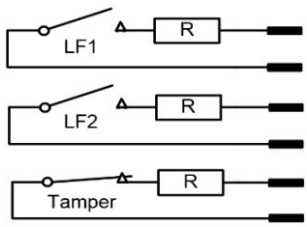

Each circuit 1&4, 2&5, 3&6 may be connected to linked (multi-channel single IS source) or separate intrinsically safe sources which are certified [Ex ia IIC] such that the series or parallel combinations of all 3 channels do not exceed 51V, 35mA and 700mW(T4), 400mW(T5) and 80mW(T6).

8 Requirements HF sensor [HF1] connector:

If the meter is installed in a zone classified as hazardous area, ensure all connections are connected to intrinsically safe interfaces according to IEC 60947-5-6 (NAMUR)! Please observe the max. admissible electrical ratings for the applicable temperature classes.

Intrinsically safe input parameters					
Sensor(s): Type 4000					
EC type examination certificate: KEMA 04ATEX1152X - Issue 5					
Temp. Class	**Ui (VDC)**	**Ii (mA)**	**Pi (mW)**	**Ci (nF)**	**Li (uH)**
T4	20	60	200	180	350
T5	20	60	80	180	350
T6	20	60	80	180	350

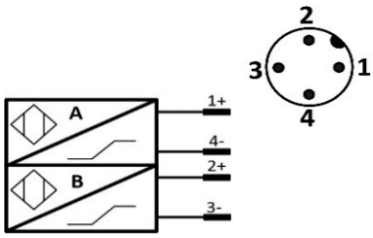

note 1: Parameter Pi is applicable for the combined sensor circuits (1A and 1B)

note 2: Parameters Ui, Ii, Ci and Li apply per sensor circuit (1A or 1B)

The M12 connector nut should be tightened with a preset torque of 0.4 Nm to guarantee IP67 ingress protection.

The M12 metal shell of the output socket is electrically connected to the gas meter body which should in gas installations be connected to (skid) earth potential.

9 Requirements Type 3740 Valve Positioning Indicator connector:

If the meter is installed in a zone classified as hazardous area, ensure all connections are connected to intrinsically safe interfaces according to IEC 60947-5-6 (NAMUR)! Please observe the max. admissible electrical ratings for the applicable temperature classes.

Intrinsically safe input parameters					
Sensor(s): Type n.a.					
EC type examination certificate: BASEEFA 17ATEX0036X - Issue 0					
Temp. Class	**Ui (VDC)**	**Ii (mA)**	**Pi (mW)**	**Ci (nF)**	**Li (uH)**
-40° to +70C	51	35	900	0	0

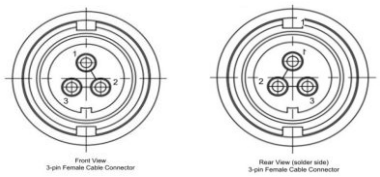

contact status when bypass opened

contact status when bypass closed

bypass status	activated pins
OPEN	1 - 3
CLOSED	1 - 2

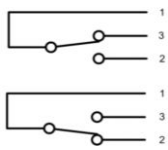

10 Slowly pressurize the meter to avoid overloading.
Do not exceed 350 mBar/second maximum when pressurizing. Rapid pressurization can cause an over-speed condition which may damage the meter. Resulting damage is NOT covered by warranty!

11 An indication of the meter condition can be obtained by analysing the pressure drop over the meter.

It is recommended that the pressure drop over the new meter is measured and recorded in the meter records. Future measurements can be compared to this value.

12 Once the meter has been commisioned, it does not require any special servicing or oil level inspections.
Under standard conditions (clean and dry natural gas) we generally advise to replace the oil every 5 years.

IOTAFLOW
SYSTEMS PVT. LTD

GasPro RPD Gas Meter Installation User Manual

Contact Us:-

IOTAFLOW SYSTEMS PVT. LTD.

C-2/13, Mayapuri Industrial Area
Phase-II, New Delhi - 110064
Call: +91-9910693866
+91-9779085987
Email: contact@iotaflow.com

Specifications subject to change without prior notice. © Iotaflow Systems Pvt. Ltd.

" If You Want To Manage It, Measure It "

www.iotaflow.com